LEX2601 Order Form

AUDIO VISUAL FURNITURE International

Date _____
AVFI Sales REP _____
Customer Signature _____

Quote No. _____
Customer No. _____
AVFI No. _____
Office Use Only

To generate your order form, please refer to the information provided below to insert the alphabetic and/or numeric code in the respective category boxes. Please note that without this filled out Order Form, your purchase **cannot** be processed.

1 Product Model	2 Finish	3 Chargeable Accessories **(One Code Per Box)**	4 Custom Cutouts
LEX2601			

1 Product Model

Finish choice for top-side and front panels

Main body and base are offered in black finish only

Code **LEX24601**

2 Choose Product Finish

Standard Finishes

AMT AST CLT CPT FMT HCT SBT SST EBT CWT SGT

BCT DNT CGT ACT SPT SET SFT VFT

3 Chargeable Accessories (Check all that apply)

	Code O0	No Accessories	
*	Code D1	**MIC-18** MX418 S/C Microphone	Qty _____
*	Code D2	**LIGHT-18** Gooseneck Light	Qty _____
*	Code D3	**FM3** Timer/Clock	Qty _____
	Code E1	**PB** 6 Outlet Power Bar	Qty _____
*	Code E3	**CUB3** Round Cable Well	Qty _____
*	Code E4	**SF-PB3** 3 Outlet Power Bar	Qty _____
*	Code E7	**PC-PATCH** Power-Data Module	Qty _____
*	Code EA	**CUB4S** Silver Power Panel	Qty _____
*	Code EB	**CUB4B** Black Power Panel	Qty _____
§ *	Code EF	**CHGQIB** Wireless Charging Station, Black	Qty _____
*	Code EJ	**CUB22C** 3 Module Power Panel (Black)	Qty _____
*	Code EK	**CUBM3** 3 Module Power & Data Panel (Black)	Qty _____
*	Code EL	**CUBM4** 4 Module Power & Data Panel (Black)	Qty _____
*	Code ES	**CHGWAC** Desktop Wireless Charger w/USB A+C	Qty _____
*	Code ET	**CUBR6** Round Cable Well 6-Port	Qty _____

* Cutout Required
§ Only on Flat Cutout

4 Custom Cutout Option (Extra charges will apply)

Please indicate custom cutout location on the drawing below

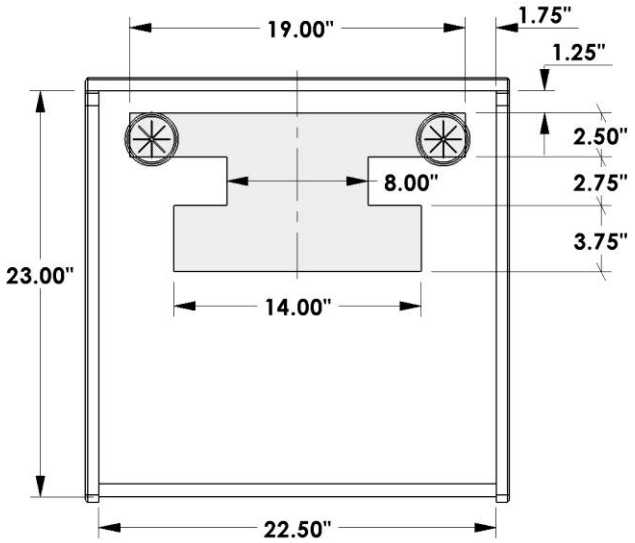

Code **C0** No Custom Cutout

Code **CC** Custom Cutout (Specify on Cutout Area Above)

cutout Area

Comments (Please use this section to provide additional information)

_____
_____
_____

Notes

CAD Drawings/Symbols
CAD drawings are available by request at sales@avfi.com
Custom Cutouts Estimated lead time within 20 business days from receipt of P.O. and signed drawings.
Customizations
Modifications to design such as shape and/or size variations have to be quoted on a per case basis and are applicable for quantities of 10+ only.